PROJECT 33: Design and Analysis of Two-Stage Operational Amplifier by using Cadence Virtuoso

A Comprehensive Study of Analog Circuits

By: Priya Chaudhary, Astitva Johri and
Bhavya Solanki

Chapters:

List of Figures……..…… 3

1. Introduction …….. 4
2. Brief Description…… 5
3. Circuit Design……. 6-7
   3.1 Schematic Design……... 6
   3.2 Simulation Setup...…….. 6
   3.3 AC Response Analysis…...……. 6
4. Simulation Results…….. 8
5. Advantages and Disadvantages…….. 9
   5.1 Advantages……. 9
   5.2 Disadvantages……. 9
6. Conclusion…….. 10
7. Frequently Asked Questions (FAQs)…….. 11

LIST OF FIGURES

Figure 3.1 Circuit of Two-Stage Operational Amplifier …….7

Figure 4.1 Simulation Results of Two-Stage Operational Amplifier ……..... 8

1. INTRODUCTION

The operational amplifier (op-amp) is a fundamental component in analog circuit design, widely used in applications such as signal conditioning, filtering, and amplification. Among various op-amp topologies, the two-stage operational amplifier is preferred due to its ability to achieve high gain, improved frequency response, and enhanced stability.
The two-stage op-amp consists of two amplifying stages: the first stage is typically a differential amplifier that provides high input impedance and initial voltage gain, while the second stage acts as a gain-enhancing stage with a low output impedance to drive external loads effectively. This configuration is highly versatile and can be optimized for various performance metrics, including power efficiency, noise reduction, and bandwidth extension.

This document explores the design and analysis of a two-stage operational amplifier using Cadence Virtuoso, discussing its circuit design, advantages, disadvantages, and answering common questions related to its implementation.

2. BRIEF DESCRIPTION

A two-stage op-amp consists of two amplification stages to achieve higher gain and better drive capability. The structure includes:

1. **First Stage - Differential Amplifier**
   - Provides high input impedance and initial voltage gain.
   - Uses a current mirror for biasing to ensure symmetrical operation.
2. **Second Stage - Gain Stage**
   - Further amplifies the signal using a common-source or common-emitter configuration.
   - Drives the output while maintaining stability and frequency response.
3. **Frequency Compensation**
   - Prevents oscillations and ensures stable operation.
   - Miller compensation introduces a capacitor between the second stage output and first stage input.
4. **Gain Calculation**
   - Total voltage gain () is given by:
   - First stage gain: 20–40 dB, second stage boosts to 60–100 dB.
5. **Performance Metrics**
   - Slew Rate: Determines the speed of output voltage change.
   - CMRR: Ensures common-mode signals are rejected.
   - PSRR: Improves circuit immunity to power supply variations.

3. CIRCUIT DESIGN

3.1 Schematic Design

1. Open Cadence Virtuoso and create a new schematic cell.
2. Add NMOS and PMOS transistors for the **differential pair stage**, ensuring proper biasing with a current mirror.
3. Implement the **gain stage** using a common-source amplifier to boost signal amplification.
4. Connect a **Miller compensation capacitor** between the gain stage output and the differential input.
5. Include the necessary **biasing circuit** to ensure stable operating conditions.
6. Verify all connections and save the schematic.

3.2 Simulation Setup

1. Open the **ADE (Analog Design Environment)** and load the designed schematic.
2. Set the **Analysis Type** to **AC Analysis**.
3. Select the **sweep variable** as frequency and specify the range (e.g., 1 Hz to 1 GHz).
4. Define the **input source** as an AC signal with 1V amplitude.
5. Run the simulation and extract key parameters such as **open-loop gain, phase response, bandwidth, and phase margin**.
6. Use the **Bode Plot** to visualize gain vs. frequency and phase shift.

3.3 Transient Response Analysis

1. Plot **Gain vs. Frequency** to observe bandwidth and open-loop gain.
2. Measure **Phase Margin** to determine circuit stability.
3. Identify the **Unity Gain Frequency**, where the gain transitions to 1.

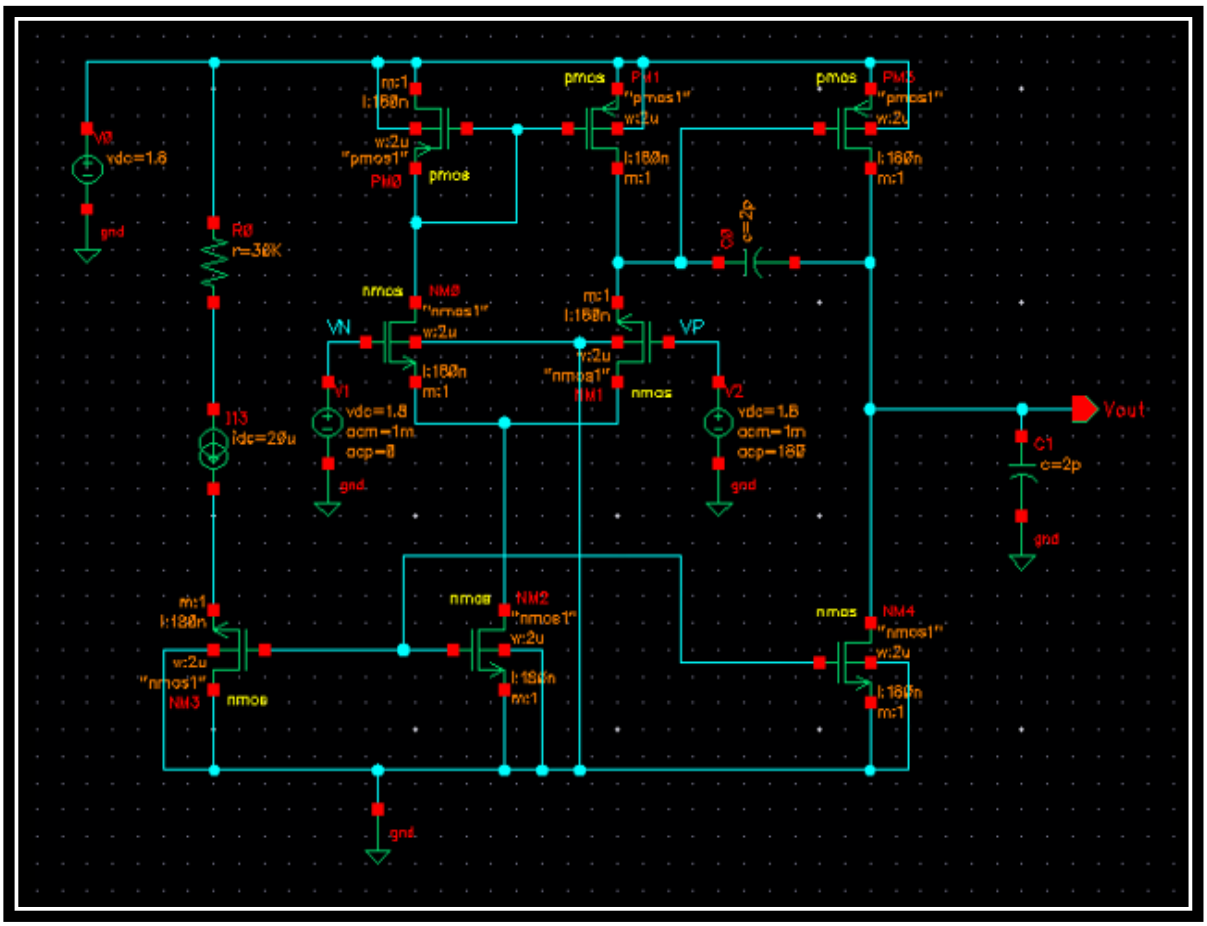

Figure 3.1 Circuit of Two-Stage Operational Amplifier

4. SIMULATION RESULTS

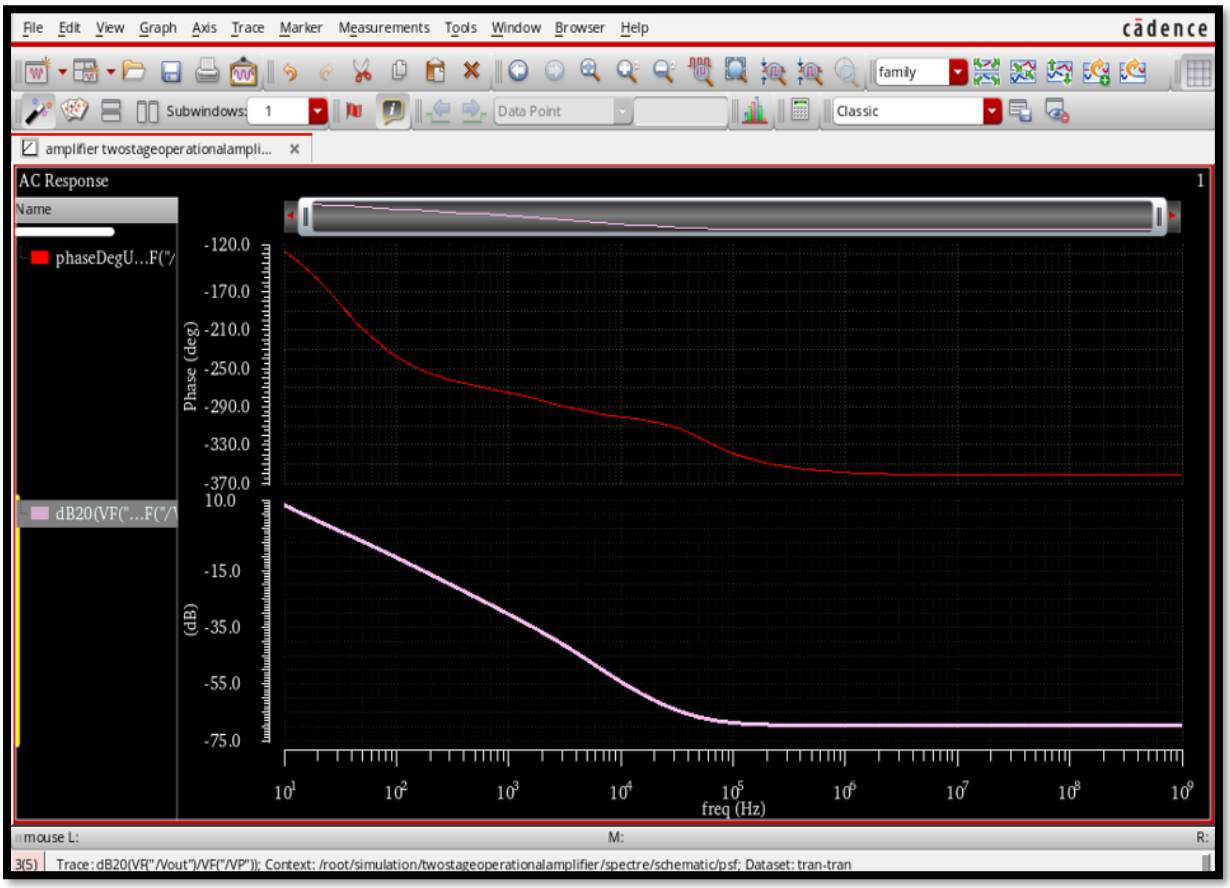

Figure 4.1: Simulation Results of Two-Stage Operational Amplifier

5. ADVANTAGES AND DISADVANTAGES

5.1 Advantages:-

1. **High Gain:** The two-stage topology significantly improves overall voltage gain compared to a single-stage amplifier.
2. **Better Frequency Response:** The second stage enhances bandwidth and stability.
3. **High Input Impedance:** The first stage (typically a differential pair) provides high input impedance.
4. **Low Output Impedance:** The output buffer reduces impedance, making it ideal for driving loads.

5.2 Disadvantages:-

1. **Complex Design:** Requires careful biasing and compensation techniques.
2. **Increased Power Consumption:** Additional stages result in higher power consumption.
3. **More Components:** Requires additional transistors and passive elements, increasing layout complexity.
4. **Compensation Challenges:** Frequency compensation needs to be optimized to avoid stability issues such as oscillations.

6. CONCLUSION

The two-stage operational amplifier is an essential component in analog electronics, offering significant advantages in terms of gain, frequency response, and flexibility. Its architecture enables designers to achieve high gain while maintaining stability, making it a suitable choice for precision applications. However, the design of a two-stage op-amp requires careful consideration of various factors, including power consumption, compensation techniques, and component selection.

Cadence Virtuoso provides a robust platform for designing and analyzing two-stage op-amps, allowing engineers to fine-tune performance metrics through simulation and optimization. By leveraging Virtuoso's advanced features, designers can effectively implement and test their circuits before fabrication, reducing design errors and enhancing overall efficiency.

Understanding the fundamental principles and trade-offs involved in two-stage op-amp design is crucial for engineers working in analog circuit design. By mastering the design and analysis of these amplifiers, designers can create highly efficient and reliable circuits suitable for various applications in communication systems, medical instrumentation, and sensor interfaces.

7. FREQUENTLY ASKED QUESTIONS (FAQs)

Q1. What are the key design parameters for a two-stage op-amp?

Answer: The key parameters include gain, bandwidth, phase margin, slew rate, input offset voltage, power dissipation, and Common Mode Rejection Ratio (CMRR).

Q2. What is the role of Miller compensation in a two-stage op-amp?

Answer: Miller compensation improves stability by introducing a dominant pole, which helps in achieving a sufficient phase margin and avoiding oscillations.

Q3. How is the gain of a two-stage op-amp calculated?

Answer: The overall gain is the product of the gains of the two stages: where is the gain of the first stage and is the gain of the second stage.

Q4. How does Cadence Virtuoso help in designing a two-stage op-amp?

Answer: Cadence Virtuoso provides schematic capture, layout design, and simulation tools such as Spectre for analyzing gain, bandwidth, phase margin, and noise characteristics.

Q5. How can we improve the bandwidth of a two-stage op-amp?

Answer: Bandwidth can be improved by optimizing compensation techniques, reducing the load capacitance, and increasing the transconductance of the input stage.